TECHNICAL DATA SHEET

SCREW PIPE 76x1800-3M16

Article No.:	076018
Weight:	11,70 kg (+-12%)
Materials:	Tube 76,1x3,6 mm, Steel S235
	Tube 43,4x3,2 mm, Steel S235
	Nuts 3x M16 DIN934
Surface:	Hot-dip galvanized steel, DIN EN ISO 1461
Installation:	PILE DRIVER MACHINE + Drilling Head 3M16

Thread M16 is also in the tube wall.

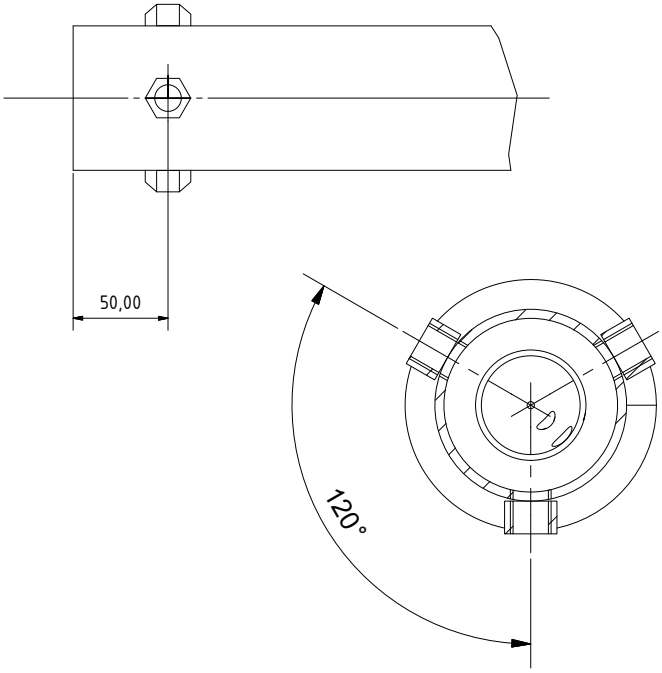

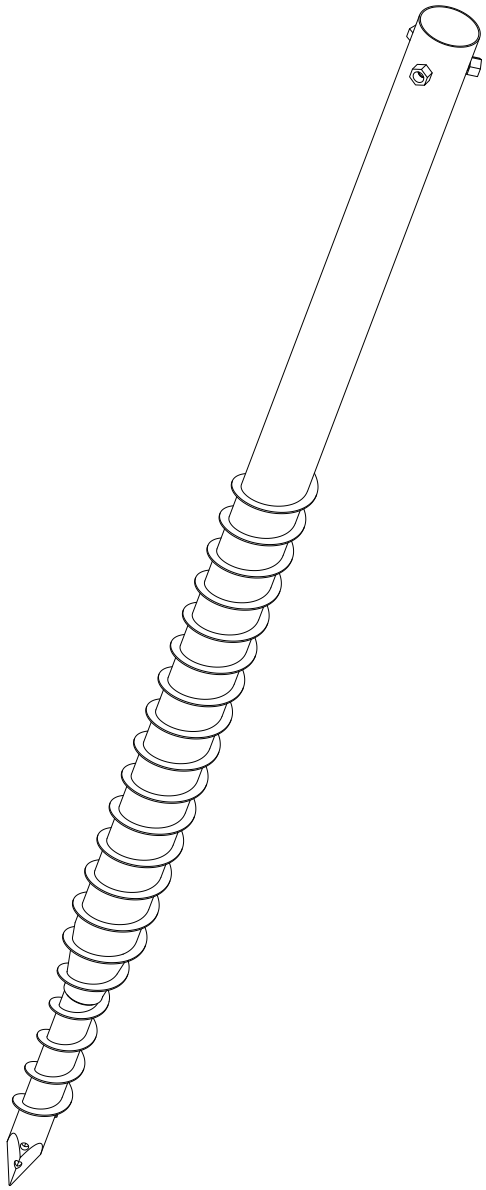

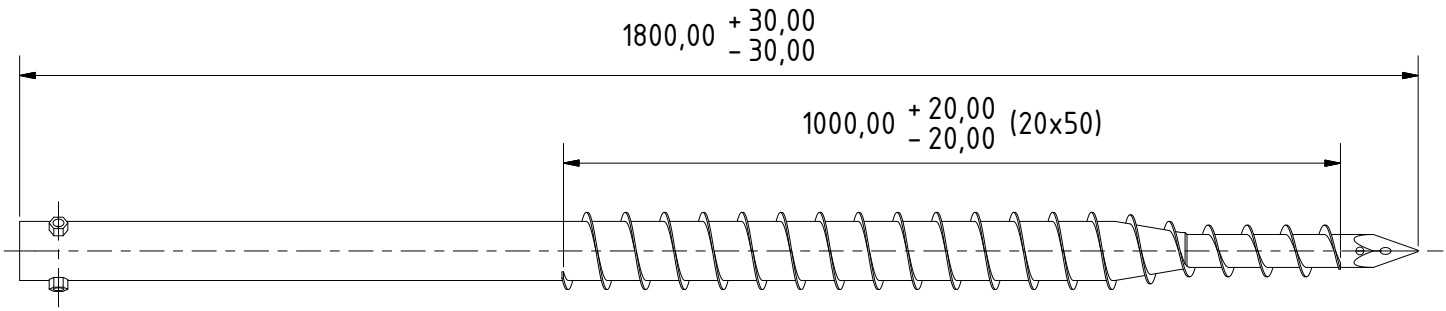

APLEG systems, s.r.o.
TAX ID: CZ29188261
info@groundscrew.cz
www.groundscrew.cz